Samsung SMART TV

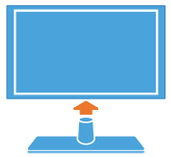

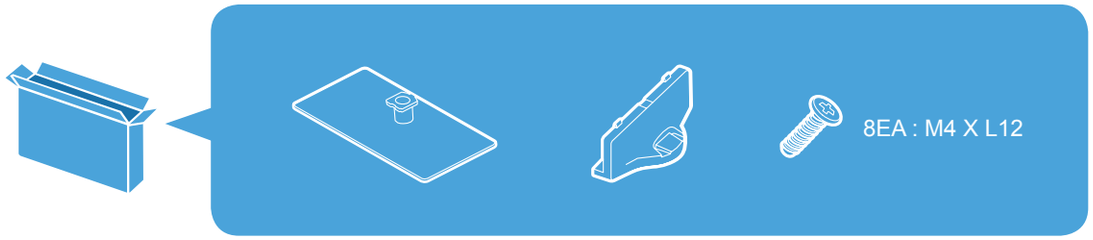


1

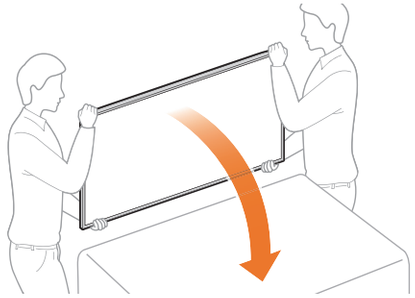

2

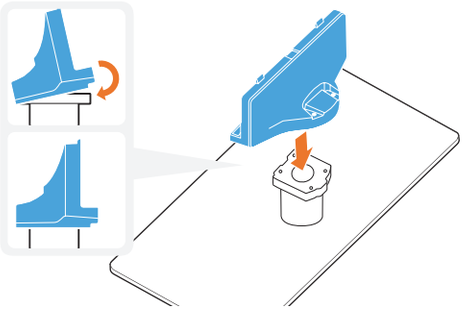

3

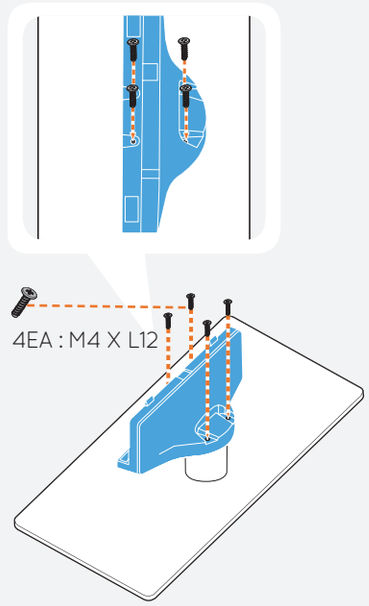


4

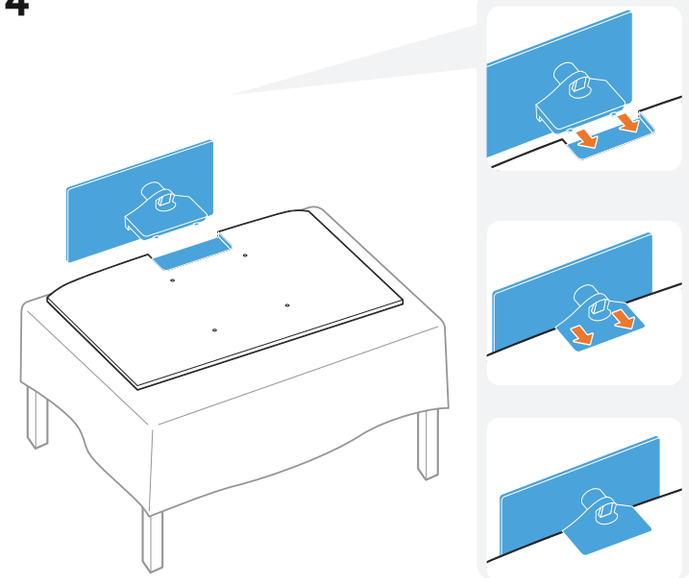

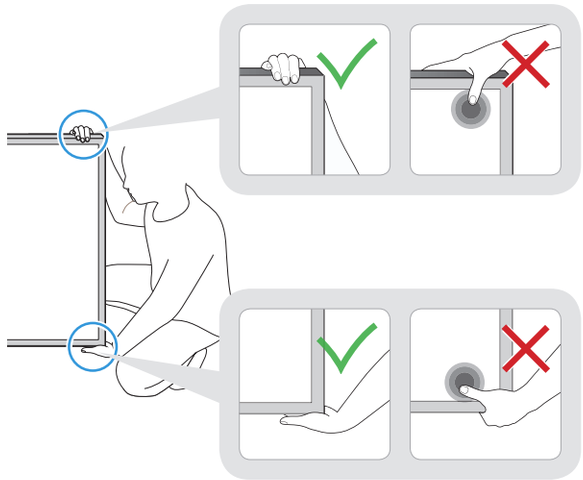

5

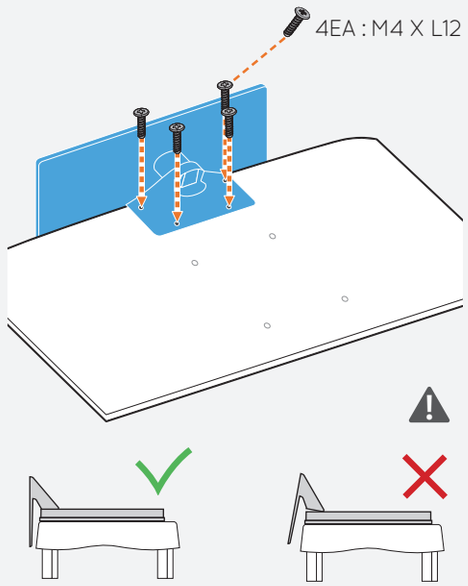


6

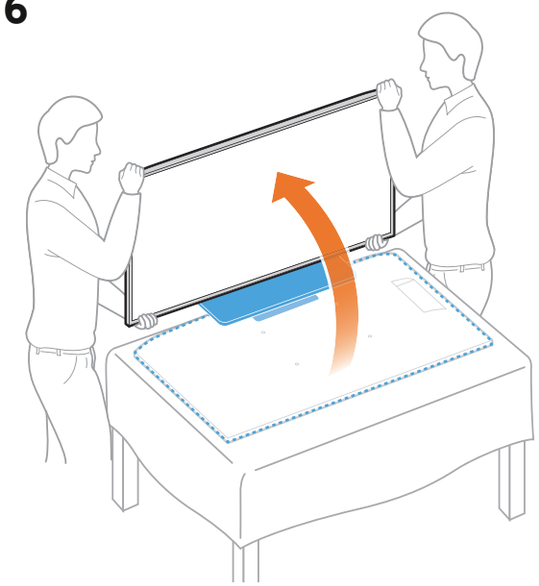

7

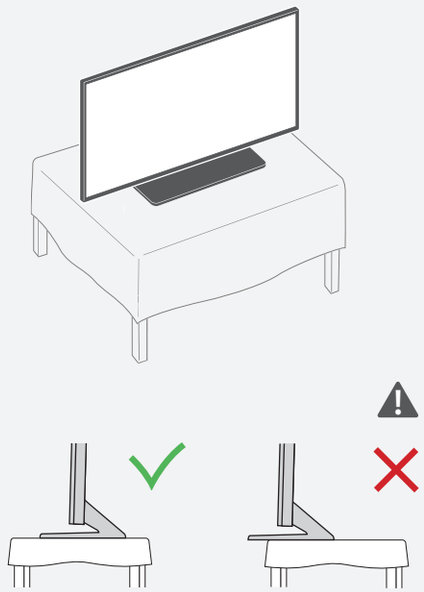

BN68-07137G-01

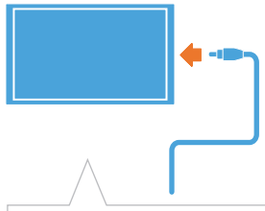

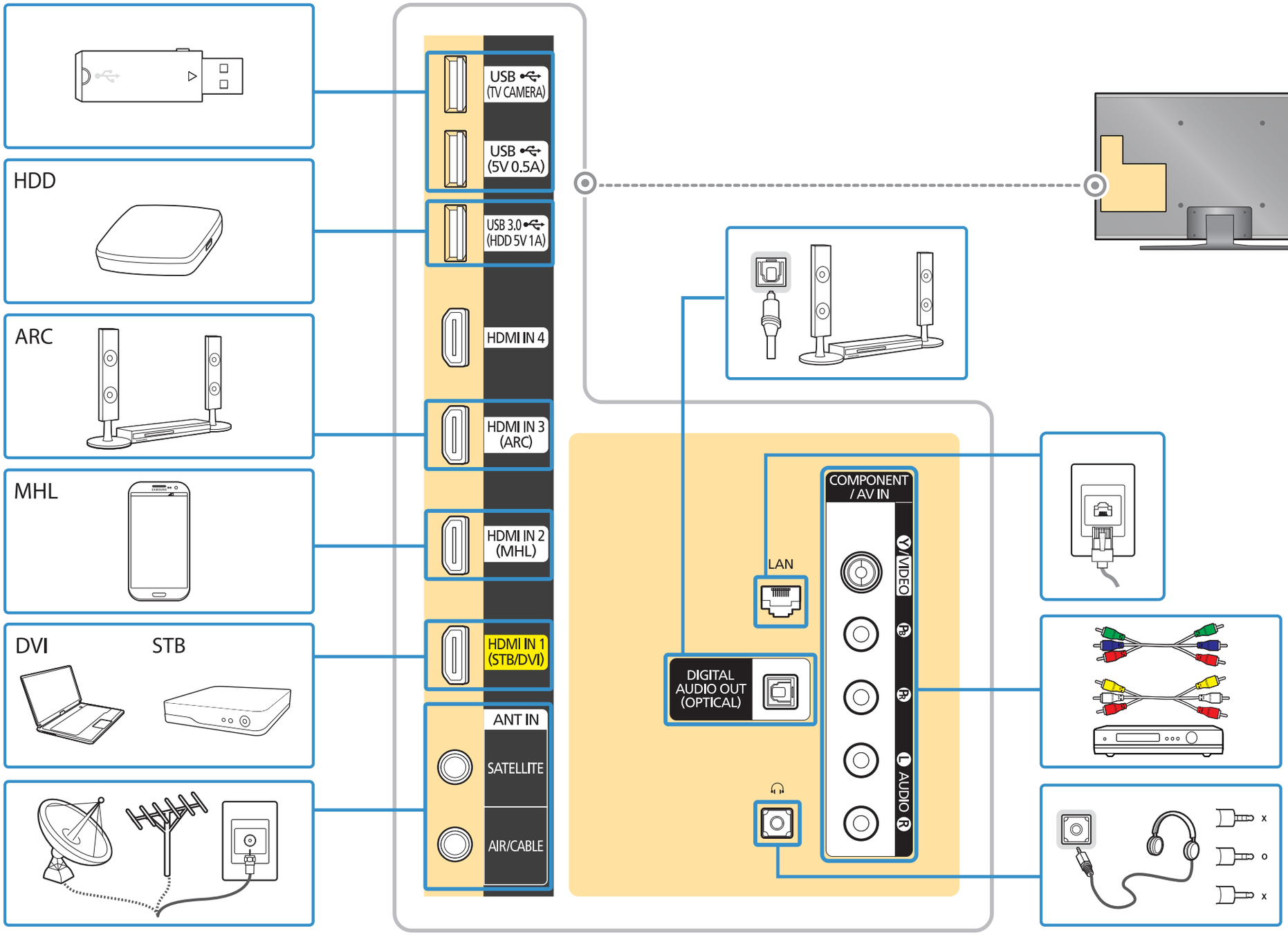
HDD
ARC
MHL
DVI
STB
USB (TV CAMERA)
USB (5V 0.5A)
USB 3.0 (HDD 5V 1A)
HDMI IN 4
HDMI IN 3 (ARC)
HDMI IN 2 (MHL)
HDMI IN 1 (STB/DVI)
ANT IN
SATELLITE
AIR/CABLE
LAN
DIGITAL AUDIO OUT (OPTICAL)
COMPONENT / AV IN
Y VIDEO
PB
PR
L AUDIO R